Conditions of use

As this machine has been designed specifically for vacuum packing food, the Manufacturer is not to be considered liable for uses other than its original function.
The machine is designed specifically for vacuum packing foods. Applications other than the original use are not recommended. Improper or different use will forfeit the warranty (refer to the warranty certificate attached to each machine for terms and conditions), may damage components and consequently make it impossible to perform the original machine functions.
F.A.C.E.M. S.p.A. - TRE SPADE - will not be liable for incomplete or incorrect translation of these instructions into other languages.

IMPORTANT

- Read these instructions before using the machine. Observe the instruction and keep them with the machine for future reference.
- Keep the working environment tidy and clean.
- Keep children away from the working area of the machine.
- Use the vacuum sealer for the purpose for which it was designed only. Applications other than vacuum packing will forfeit the warranty (refer to the warranty certificate attached to each machine for terms and conditions) and may be dangerous.
- Do not overload the machine. Look after the machine carefully.
- Rest the device on a stable, safe surface. Dropping the machine may cause severe damage.
- Do not pack liquid foods or substances inside bags. Failure to respect this instruction will make it impossible to seal the bag and cause damage to the vacuum sealer. Use universal glass jars with a special vacuum valve for liquid foods.
- Use an universal glass jar for packing food with a high liquid substance content.
  Apply the valve as shown below.
- The residual liquid sucked in from the bags will be deposited inside the extractable tray (3) contained in the suction chamber. The tray may be removed and washed (NOT SUITABLE FOR DISHWASHERS).
- Check for foreign objects (knives, blades, tools, etc.) near the sealing bar (5) before starting each process.
- Always stop and unplug (12) the machine before starting any operation (e.g. cleaning, checking packed products, checking correct assembly, etc.) to prevent unexpected start-up. This precaution must also be adopted when the machine is not working. Check that mains voltage and frequency correspond to those shown on the machine and that the plug is proportioned to the consumed current.
- Only use original spare parts and accessories.
- This is an electrical device. Never soak it in water. Never expose the machine to jets of water.
- Never pull the cord (12) to unplug the machine.
- The power socket you use must be connected to earth and your electrical system must be provided with an automatic circuit breaker (automatic cut-out).
- Repairs must be carried out by specialised personnel authorised by the manufacturer.
- WARNING! At sealing level 3 do not carry out more than 8 continuous cycles.
- In the case of damage to the power cord, it must be replaced by the manufacturer or its Service Dept. or by a skilled person aware of the risks inherent in operations on electrical appliances.
- The appliance is not intended for use by persons (including children) with reduced physical, sensory or mental faculties, or lacking experience or knowledge, unless they have undergone supervision or training on the use of the appliance by a person responsible for their safety.
- WARNING: In order to prevent any hazard due to accidentally switching on the circuit breaker, this appliance must not be powered with an external control device, such as a timer or be connected to a circuit that is regularly turned on or off.

Use and maintenance instruction manual

The vacuum packer must be installed and used by only one operator at a time. It is not designed to be operated by more than one person at a time.

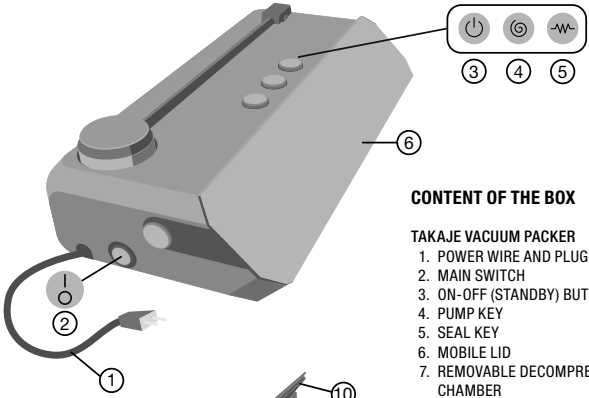

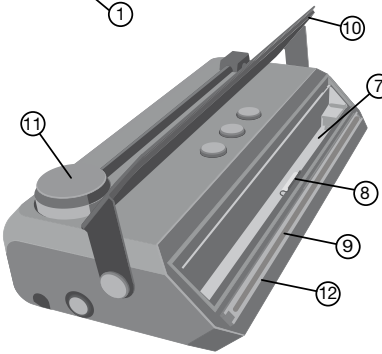

CONTENT OF THE BOX

TAKAJE VACUUM PACKER

1. POWER WIRE AND PLUG
2. MAIN SWITCH
3. ON-OFF (STANDBY) BUTTON
4. PUMP KEY
5. SEAL KEY
6. MOBILE LID
7. REMOVABLE DECOMPRESSION CHAMBER
8. CLIP FOR BAG REFERENCE
9. SEALING BAR
10. SEAL
11. SUCTION EXTENSION
12. PROTECTIVE TAPE ON SEALING BAR

ADDITIONAL COMPONENTS

13. VACUUM PACKING BAGS
14. SET OF TAKAJE VALVES
15. TAKAJE VALVE APPLICATOR

13

14

15

Starting up

1

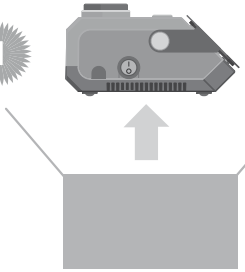

Remove the content from the box.

2

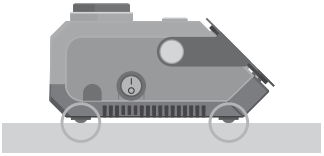

Arrange on worktop and check that the feet rest on the surface.

3

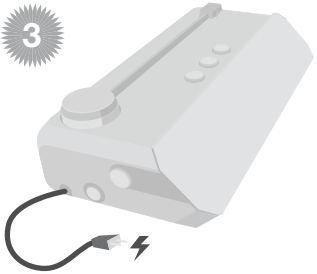

Plug into a power socket.

4

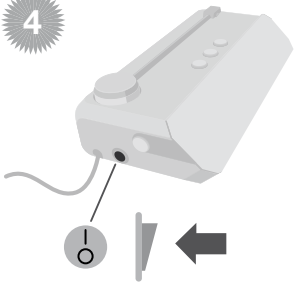

Turn the GENERAL SWITCH (2) to position I (on)

5

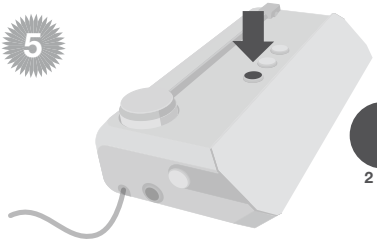

Hold the STAND-BY button (3) pressed for 2 seconds.

"To turn the packer off follow point (5) and then move the MAIN SWITCH (2) to 0 (off)"

Wall mounting

(possible working position)

1 **Drill 2 holes at approximately 25 cm from the worktop, 20 cm apart, to insert two Ø 6 mm anchor bolts.**

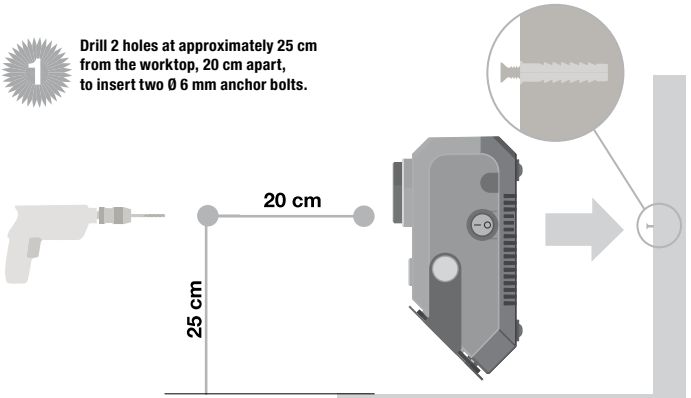

2

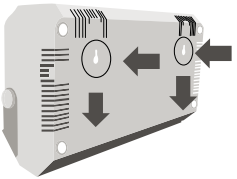

Fix the anchor bolts in the holes and secure the machine using the two holes in the base.

Space-saving position

(... between one use and the next)

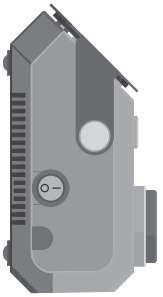

Vertical space-saver position

Automatic cycle

1

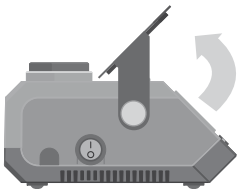

Lift the MOBILE LID (6).

2

Insert the required content in an appropriately sized bag (contact a TRE SPADE retailer for various sizes).

3

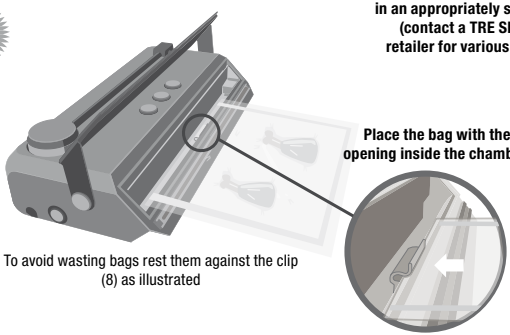

Place the bag with the opening inside the chamber,

To avoid wasting bags rest them against the clip (8) as illustrated

4

Keep the bag content away from the sealing bar.

Lower the lid

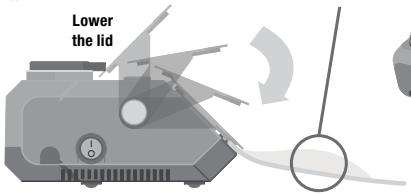

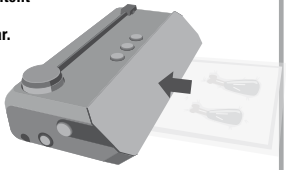

keep pressed where shown until the bag starts to flatten

To interrupt the manual cycle at any time, press the STAND BY key (3). The packer will turn off.

Automatic cycle

5

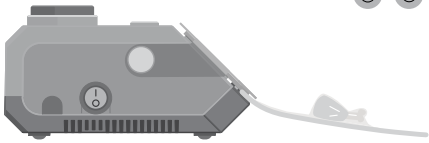

Wait for the end of the suction cycle indicated by the lighting up of the SEAL button (5).

6

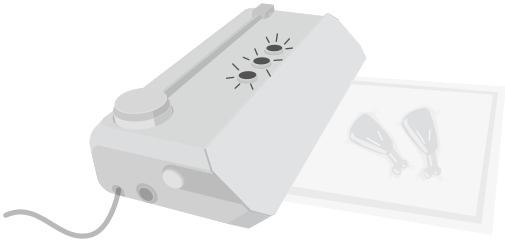

The three blinking buttons indicate that the bag is being sealed.

7

Wait for the automatic release before retrieving the bag.

8

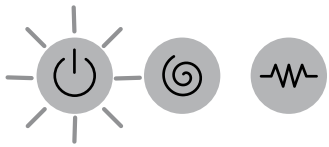

Wait for the STAND-BY button (3) to turn steady to start a new cycle.

Manual cycle

The manual cycle is useful to obtain a partial vacuum and prevent damage to delicate food (e.g.: berries, lettuce, soft bread, soft cheese, etc.) caused by excessive compression.

1

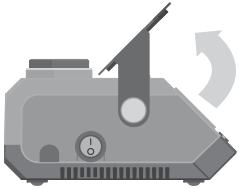

Lift the MOBILE LID (6).

2

Insert the required content in an appropriately sized bag (contact a TRE SPADE retailer for various sizes).

3

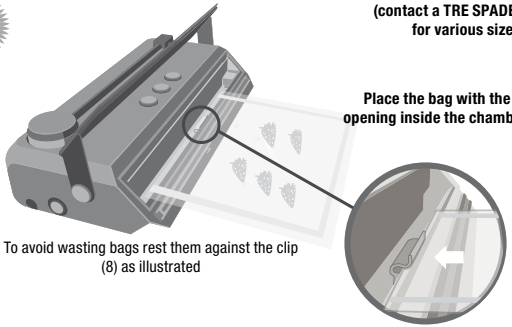

Place the bag with the opening inside the chamber,

To avoid wasting bags rest them against the clip (8) as illustrated

4

Lower the lid

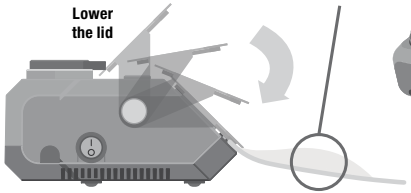

Keep the bag content away from the sealing bar.

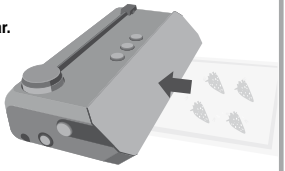

Keep pressed where shown until the bag starts to flatten

To interrupt the manual cycle at any time, press the STAND BY key (3). The packer will turn off.

Manual cycle

5

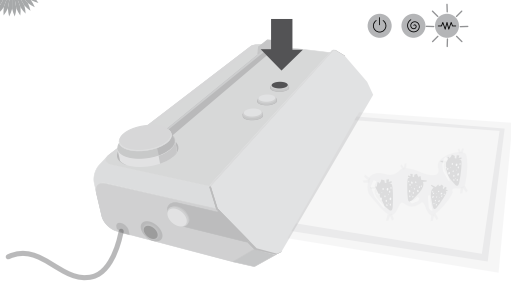

Press the SEAL button (5) when reaching the required air suction level; this way sealing is carried out

Note: The sealing operation immediately interrupts the suction of air from inside the bag although the suction pump will continue to run. Depending on when the SEAL button (8) is pressed, total vacuum in the bag can be avoided, leaving a minimum quantity of air inside, for example to prevent compressing or misshaping the food being packaged.
Remember that food will keep longer if there is less air in the bag.

6

Wait for the automatic release before retrieving the bag.

7

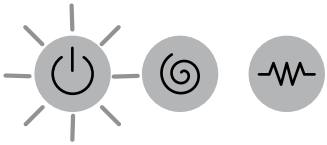

Wait for the STAND-BY button (3) to light up fixed to start a new cycle.

Jar cycle

This method creates a vacuum and turn any universal jar with metal lid into a vacuum packing jar.

IMPORTANT

FOR CORRECTLY USING THE SYSTEM
TO FORM A VACUUM IN A JAR,
CAREFULLY FOLLOW THE INSTRUCTIONS
GIVEN ON THE LEAFLET
IN THE VALVE PACKAGE.

1

Take any ordinary jar with a metal lid

Clean carefully inside and outside of the lid
Eliminate stickers and glue
Don't scratch the lid

2 **Put Takaje VacuumSeal valve in the special seat on the applicator**

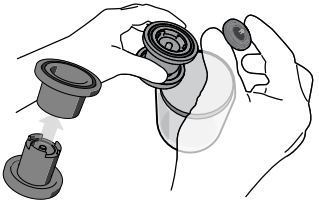

3 **Check the correct position of the valve**

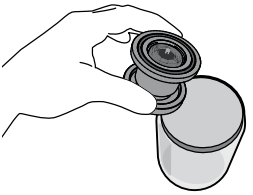

4 **Place the applicator in the middle of the lid and hold it by means of two fingers. Stroke the applicator top**

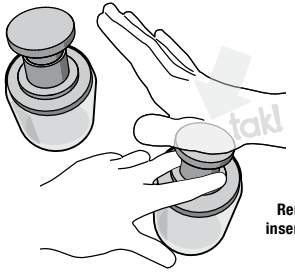

Remove the applicator and check the correct inserction of Takaje VacuumSeal valve on the lid

Jar cycle

(… and rigid containers)

5

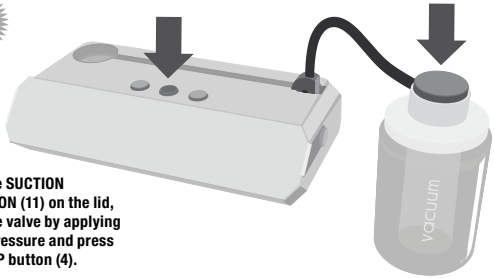

Place the SUCTION EXTENSION (11) on the lid, cover the valve by applying a light pressure and press the PUMP button (4).

The SEAL button (5) will light up once the optimal vacuum has been reached. The extension can now be removed.

Check that the extension seal is well fitted on the lid of the jar.

To interrupt the manual cycle at any time, press the STAND BY key (3). The packer will turn off.

IMPORTANT

Never aspirate liquid directly. Caution is needed when vacuum sealing liquid substances.

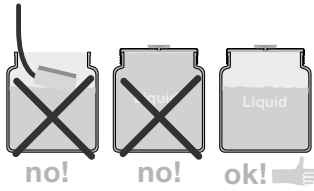

6

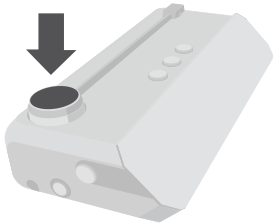

Carefully re-position the extension with suction facing downwards, to allow further operations

Adjusting the temperature of the sealing bar

1

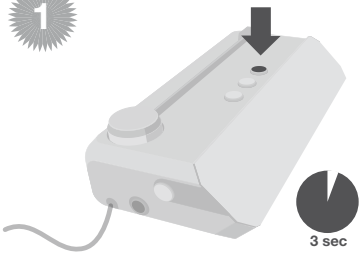

IMPORTANT: The vacuum sealer is ready for operation when leaving the factory. NO SETTINGS ARE NEEDED when the bags supplied with the machine or other TRE SPADE bags are used.

Hold the SEAL button (5) pressed for three seconds. The corresponding button will blink to indicate the current temperature of the sealing bar.

2

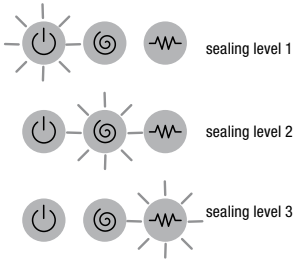

Press the SEAL button (5) within three seconds and select the required level.

Note: Set the temperature according to the thickness and the features of the bag. Sealing setting 2 is recommended for 95 micron thick bags (e.g. those supplied with the machine). The vacuum sealer is set to sealing level 2 by default.

After setting the temperature of the sealing bar, it is advisable to run a few sealing tests to check operation before packing the food.

IMPORTANT Repeated sealing operations carried out at excessively high temperature for the bags will damage the machine beyond repair. Do not use sealing setting 3 unless not strictly necessary and in any case only with bags thicker than 95 microns.

Cleaning

As mentioned above, switch off the machine and unplug it at the end of each process before starting to clean it. The machine body may be washed with a damp cloth. Never expose the machine to direct jets of water or soak it in water. Do not use detergents or grease removers.
The extractable compression chamber (7) is the only part which may be washed under running water after having been removed from the machine (NOT SUITABLE FOR DISHWASHERS).

Maintenance

No routine maintenance is required. However, perfect cleaning after use is needed to keep the machine in tiptop conditions.

Use only genuine spare parts and accessories for supplementary maintenance and replacements to avoid problems due to different production characteristics. In the event of the use of spare parts other than genuine ones, the terms of the warranty will be invalidated and any liability is declined for harm to persons or property. Refer to the numbers shown in the Figures and specify the model and serial number of your machine in your order (the serial number is given on the rating plate on the bottom of the machine).

Accidental stops

In the event of unexpected machine stops during processing, before seeking the cause of the problem, quickly disconnect the electrical power supply by switching off the machine and then disconnecting the power cord (1) from the socket.
After this:
- If the stop is due to a blackout, wait for normal conditions to be restored before plugging the machine back in.
- If the problem is due to causes related to the electrical circuit, call the retailer to have the machine checked by the manufacturer.

Faulty operation

	Problem	Solutions
1	The vacuum machine fails to turn on	• Check that both the main energy saving switch (2) and the on/off (stand by) switch (3) are on and that the power wire (1) is connected to the mains
2	The machine does not to start creating a vacuum in the bags	• Check that the suction extension (11) is positioned correctly in its housing • At the start of the cycle keep the mobile lid (6) pressed long enough for the bag to flatten out well on the product • Make sure that none of the bag contents are between the mobile lid (6) and the sealing bar (9) • Try changing the bag to see if it is a faulty one

	Problem	Solutions
3	The machine seals without firstly creating a vacuum in the bag	• Make sure that the open side of the bag is inside the machine decompression chamber (7), beyond the sealing bar (9)
4	The machine creates the vacuum but does not seal the bag	• Check that you have not vacuum packed food that might have rigid or pointed parts that during packing could have punctured the bag (e.g. cheese rinds or bones) • Try changing the bag to see if it is a faulty one
5	Sealing spoils the bag “melting” it	• Make sure you use original TRE SPADE bags • Check that you have not changed the sealing time by accident; refer to the “Sealing bar temperature adjustment” paragraph
6	As soon as it is connected to the mains, the vacuum packer has started a cycle on its own without using any control	• The last time it was used it was cut off by a blackout or was not switched off correctly. Allow the packer to complete the cycle or press the stand by key (3). The packer will be ready to work normally.
7	The machine creates the vacuum and seals correctly but after a while the bag swells again	• Try changing the bag to see if it is a faulty one • Check that the bag is not dirty with food (especially fats and serum) in the area where sealing takes place; in which case, carefully clean the area concerned with a tissue • Check that there are no puckers on the seal and that it has been carried out at the correct temperature (also see point 4 above) • Certain fresh vacuum-packed foods (e.g. beans, runner beans, courgettes, some fresh sausages, fresh cheeses, etc.) also release gas, which gets trapped in the already sealed bag. • Check that you have not changed the sealing time by accident; refer to the “Sealing bar temperature adjustment” paragraph
8	The vacuum packer does not create a vacuum in the jars	• Check that the jar lid is perfectly clean outside and inside and that there are no remains of foreign material (food, glue, labels) in the area below and immediately surrounding the valve • For further details please refer to the cautions given in the leaflet provided with the valves
9	The jars lose their vacuum after a short time	• Certain fresh vacuum-packed foods (e.g. beans, runner beans, courgettes, some fresh sausages, fresh cheeses, etc.) also release gas, which gets trapped in the jar already under vacuum. • Check that the jar lid is perfectly clean outside and inside and that there are no remains of foreign material (food, glue, labels) in the area below and immediately surrounding the valve • For further details please refer to the cautions given in the leaflet provided with the valves

Food storage times

The list below shows the storage times for vacuum packed foods.
The times are only INDICATIVE. The initial conditions of the food are essential for perfect preservation.

At ambient temperature (+20° / + 25° C)	Normal conditions		**Vacuum**
Bread	2 days	→	**8** days
Dry biscuits	120 days	→	**360** days
Dry pasta/Rice	180 days	→	**360** days
Nuts	120 days	→	**360** days
Flour/Tea/Coffee	120 days	→	**360** days
Refrigerated at +3° / +5° C			
Raw meat	2 - 3 days	→	**6 - 9** days
Fresh fish	1 - 3 days	→	**4 - 6** days
Salami	4 - 6 days	→	**20 - 25** days
Soft cheese	5 - 7 days	→	**14 - 20** days
Seasoned cheese	15 - 20 days	→	**30 - 60** days
Parmigiano / Grana Padano	20 days	→	**60** days
Raw vegetables	1 - 5 days	→	**7 - 20** days
Fresh fruit	5 - 10 days	→	**14 - 20** days
Vegetable soup	2 - 3 days	→	**8 - 15** days
Pasta/Risotto/Lasagna	2 - 3 days	→	**6 - 10** days
Cooked meat	3 - 5 days	→	**10 - 15** days
Cream and fresh fruit cake	2 - 3 days	→	**6 - 10** days
Other cakes	5 days	→	**20** days
Refrigerated at -18° / -20° C			
Meat	120 days	→	**480** days
Fish	90 days	→	**360** days
Fruit and vegetables	300 days	→	**720** days

WARNING:
Bacterial growth will slow down in a vacuum but not stop entirely. Therefore, some food must be stored in a refrigerator or freezer.
Pre-packed food must be consumed within the best by date shown on the package.